POLMO	ALU	CHR	OE
07.422	165		46 817 654
07.454	275		51788194

FIAT 500 1.4 1/2007 - 6/2010 70-100HP, 51-74kW, 1368ccm

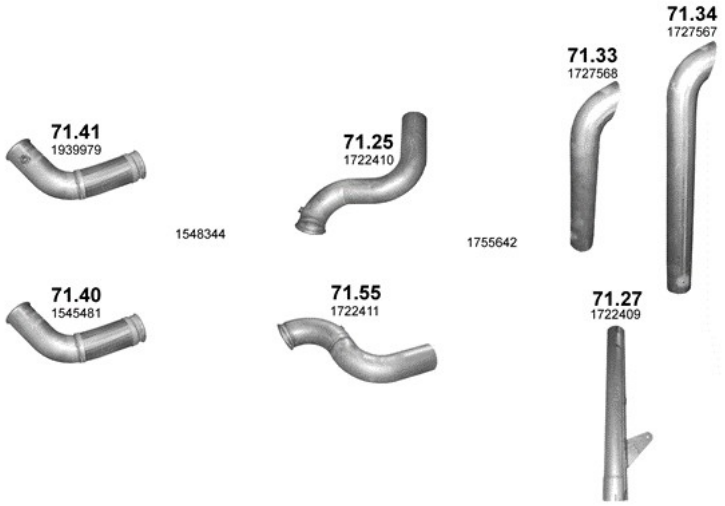

POLMO	ALU	CHR	OE
71.25	150		1722410
71.27	200		1722409 1859808
71.33	110		1727568
71.34	155		1727567
71.40	220		1545481
71.41	220		1939979
71.55	150		1722411

SCANIA P, R, T 15.6 (Diesel) Sam. skrzyniowy/Ciągnik siodłowy 4/2004 - 500-560-620HP, 368-412-456kW, 15600ccm

---

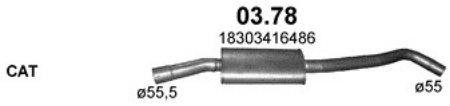

POLMO	ALU	CHR	OE
03.78	155		18303413071 18303416486 18303427856

BMW X3 E83 2.0 D (Diesel) 10/2004 - 8/2007 150HP, 110kW, 1995ccm

---

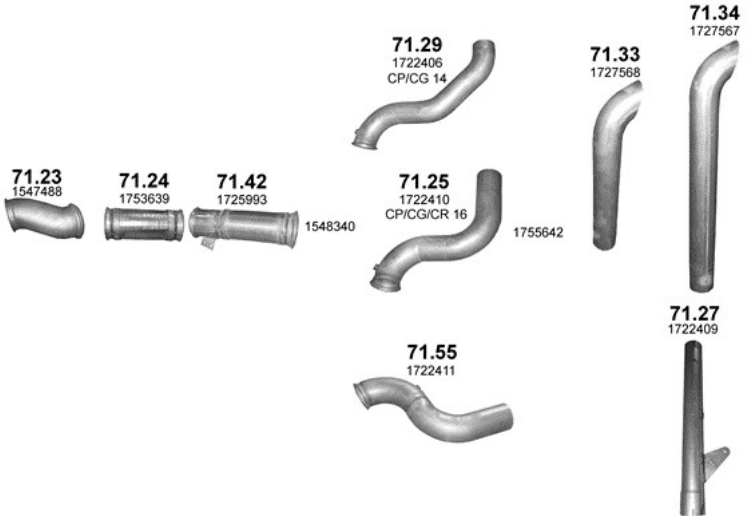

POLMO	ALU	CHR	OE
71.23	100		1547488 1771141
71.24	110		1753639
71.25	150		1722410
71.27	200		1722409 1859808
71.29	130		1722406
71.33	110		1727568
71.34	155		1727567
71.42	250		1725993
71.55	150		1722411

SCANIA P, R, T 11.7 (Diesel) 2/2004 - 380-420HP, 279-309kW, 11716ccm

---

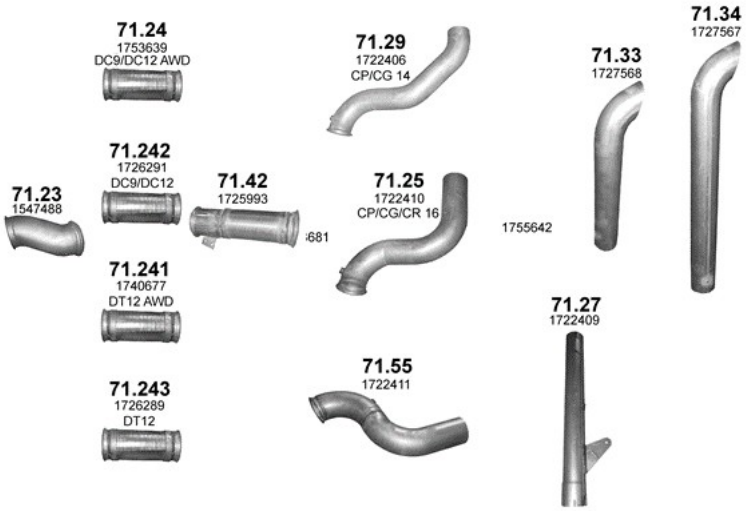

POLMO	ALU	CHR	OE
71.23	100		1547488 1771141
71.24	110		1753639
71.241	130		1740677
71.242	110		1726291
71.243	130		1726289
71.25	150		1722410
71.27	200		1722409 1859808
71.29	130		1722406
71.33	110		1727568
71.34	155		1727567
71.42	250		1725993
71.55	150		1722411

SCANIA P, R, T 8.9 (Diesel) 3/2004 - 230-270-310HP, 169-198-228kW, 8867ccm
SCANIA P, R, T 11.7 (Diesel) 3/2004 - 340-380-420-480HP, 250-279-309-353kW, 11716ccm

---

POLMO	ALU	CHR	OE
44.04	235		17430-70740

LEXUS IS 200 2.0 3/1999 - 7/2005 153HP, 114kW, 1988ccm

POLMO	ALU	CHR	OE
99.244		1800	8E0254200HX

AUDI A4 QUATTRO 2.0 SEDAN, KOMBI 11/2004 - 6/2008 200-220HP, 147-162kW, 1984ccm

---

POLMO	ALU	CHR	OE
99.244		1800	8E0254200HX

AUDI A6 2.0 SEDAN, KOMBI 6/2005 - 170HP, 125kW, 1984ccm

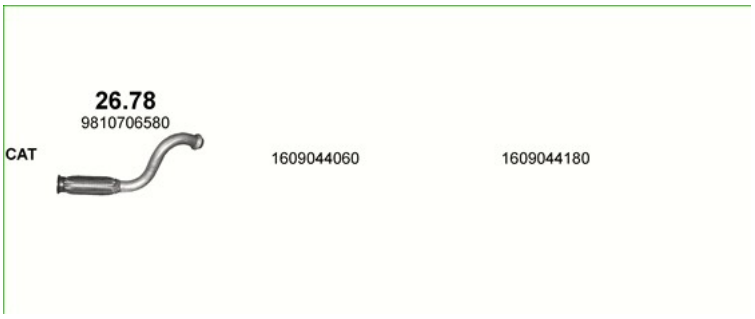

POLMO	ALU	CHR	OE
26.78		240	9673664580 9674554780

CITROEN C4 GRAND PICASSO 1.6 D (Diesel) 9/2013 - 2015 92-115HP, 68-85kW, 1560ccm

---

POLMO	ALU	CHR	OE
26.78		240	9673664580 9674554780

CITROEN C4 GRAND PICASSO 1.6 D (Diesel) 7/2014 - 8/2018 99-115-120HP, 73-85-88kW, 1560ccm

---

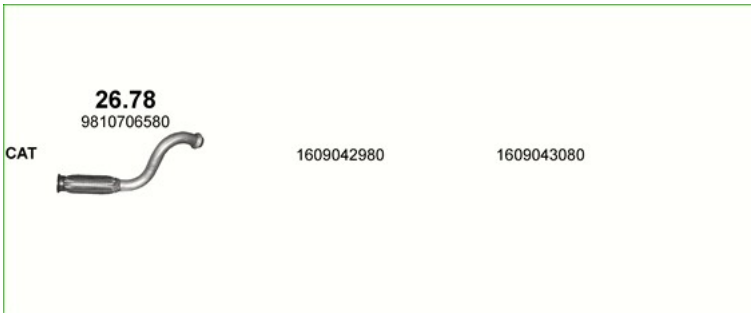

POLMO	ALU	CHR	OE
26.78		240	9673664580 9674554780

CITROEN C4 PICASSO 1.6 D (Diesel) 9/2013 - 2015 92-115HP, 68-85kW, 1560ccm

---

POLMO	ALU	CHR	OE
26.78		240	9673664580 9674554780

CITROEN C4 PICASSO 1.6 D (Diesel) 7/2014 - 8/2018 99-115-120HP, 73-85-88kW, 1560ccm

---

POLMO	ALU	CHR	OE
26.78		240	9673664580 9674554780

PEUGEOT 308 1.6 D (Diesel) HATCHBACK 4/2014 - 2/2018 99-115-120HP, 73-85-88kW, 1560ccm

---

POLMO	ALU	CHR	OE
26.78		240	9673664580 9674554780

PEUGEOT 308 1.6 D (Diesel) KOMBI 4/2014 - 2/2018 99-115-120HP, 73-85-88kW, 1560ccm

---

POLMO	ALU	CHR	OE
26.78		240	9673664580 9674554780

PEUGEOT 308 1.6 D (Diesel) HATCHBACK 9/2013 - 2015 95-115-120HP, 68-85-88kW, 1560ccm

---

POLMO	ALU	CHR	OE
26.78		240	9673664580 9674554780

PEUGEOT 3008 1.6 D (Diesel) 6/2016 - 99-115-120HP, 73-85-88kW, 1560ccm

---

POLMO	ALU	CHR	OE
26.78		240	9673664580 9674554780

PEUGEOT 5008 1.6 D (Diesel) 12/2016 - 99-115-120HP, 73-85-88kW, 1560ccm

---

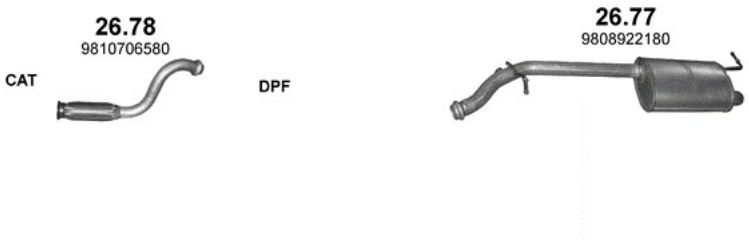

POLMO	ALU	CHR	OE
26.77	195		9808922180
26.78		240	9673664580 9674554780

CITROEN JUMPY III 1.6 D (Diesel) 4/2016 - 95-115HP, 70-85kW, 1560ccm
PEUGEOT EXPERT III 1.6 D (Diesel) 4/2016 - 95-115HP, 70-85kW, 1560ccm
PEUGEOT TRAVELLER 1.6 D (Diesel) 4/2016 - 95-115HP, 70-85kW, 1560ccm
TOYOTA PROACE 1.6 D (Diesel) 4/2016 - 95-115HP, 70-85kW, 1560ccm